TORCH

FLANGED HUB DIMENSIONS

FAT BIKE HUBS

FAT REAR 170MM

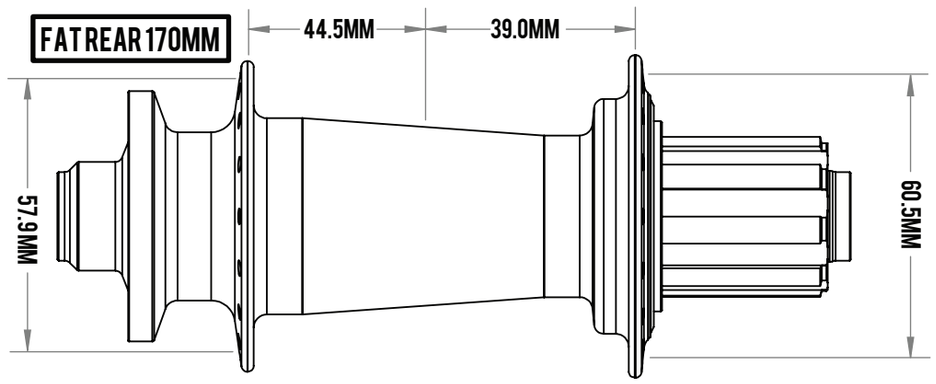

FAT REAR 190MM

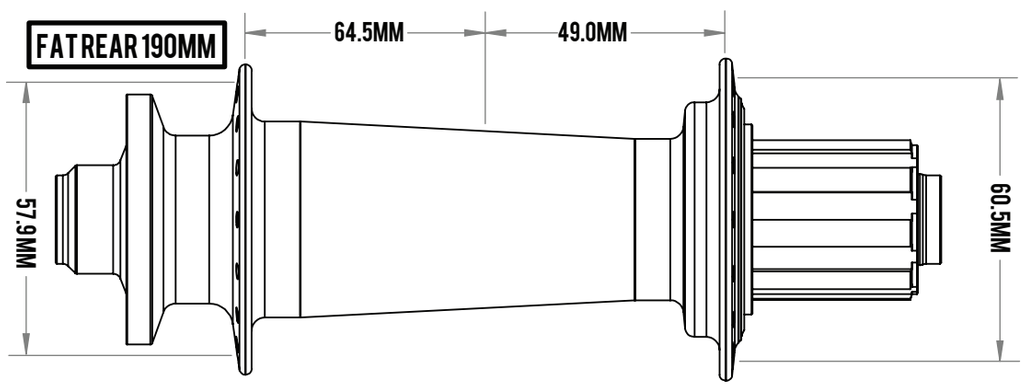

FAT FRONT 150MM

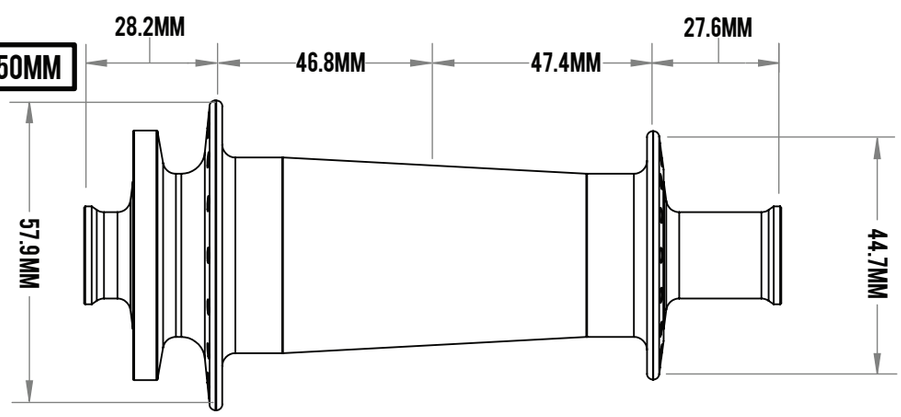

FAT FRONT: QR 135, 15X135, 15X142

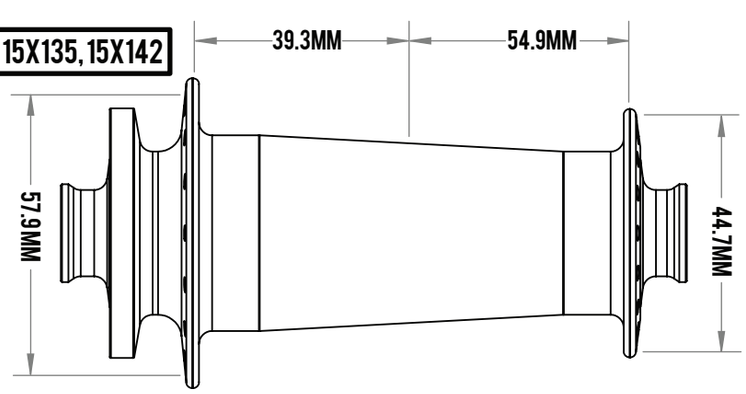
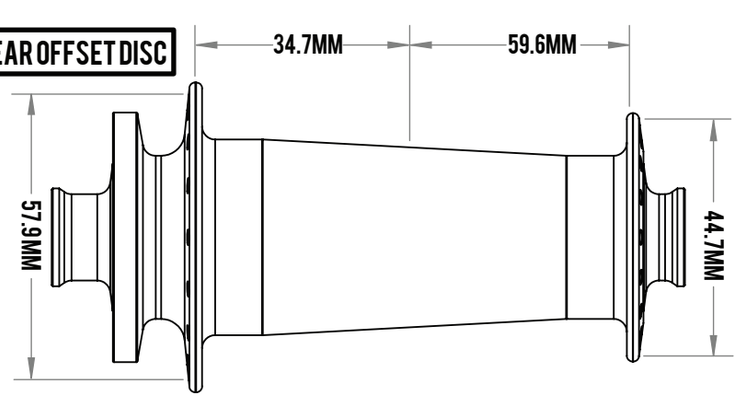
FAT FRONT: 10X35 REAR OFFSET DISC